LiGHT SKY

www.lightsky.com.cn

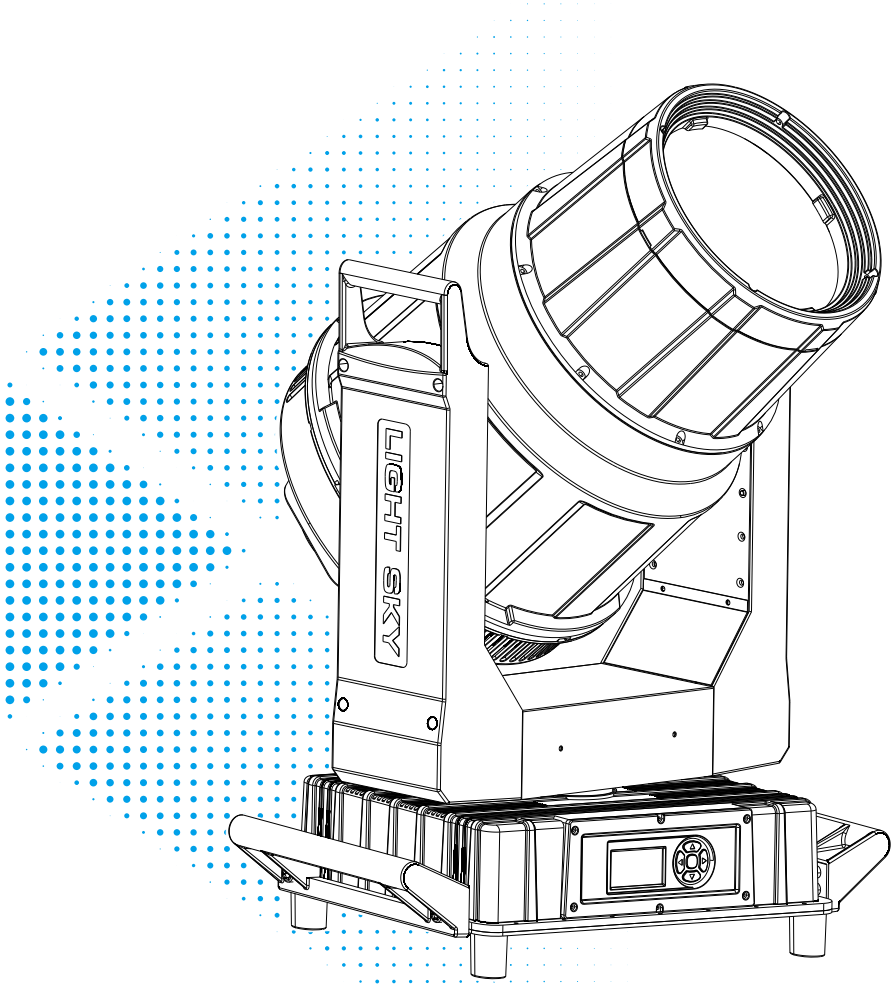

SHARK LASER

User Manual

Please read the instruction carefully before use

Fly Dragon Lighting Equipment Co., Ltd.

Add : NO.4 JINGNENG ROAD 1, HUADU DISTRICT, GUANGZHOU, CHINA.
Tel : 020-61828288 Fax : 020-61828188 Postal Code : 510820
Email : flydragon@lightsky.com.cn

Social Media

LiGHT SKY Wechat

Contents

1. Safety information.....2
2. Technical information.....4
3. Attachment and body size.....7
4. Installation and connecting.....8
5. Control panel.....12
6. Menu setting.....13
7. Channel function.....16
8. Circuit connecting diagram.....18
9. Cleaning and maintenances.....19
10. Troubeshooting.....20
11. Duty exonerative and copyright protection.....21

Congratulations on choosing our company product! We thank you for your custom.

◆Please note that this product, as all the others in the rich my company range, has been designed and made with total quality to ensure excellent performance and best meet your expectations and requirements.

◆Carefully read this user manual in its entirety and keep it safe for future reference. It is essential to know the information and comply with the instructions given in this manual to ensure the fitting is installed, used and serviced correctly and safely.

◆My company disclaims all liability for damage to the fitting or to other property or persons deriving from installation, use and maintenance that have not been carried out in conformity with this user manual, which must always accompany the fitting.

◆My company reserves the right to modify the characteristics stated in this user manual at any time and without prior notice.

SAFETY INFORMATION



■This lighting fixture is for professional use only - it is not for household use.

■ **Installtion**

Make sure all parts for fixing the projector are in a good state of repair.

Make sure the point of anchorage is stable before positioning the projector.

The safety chain must be prgperly hooked onto the fitting and secured to the framework.

When suspending the fixture, ensure that the supporting structure and all hardware used can hold at least 10 times the weight of all the devices they support.

■ **Mounting surface and fire protection**

Please do not install the fixture onto combustible surface.



Keep all combustible materials at least 0.5 m away from the fixture.

Ensure a minimum clearance of 0. 2m around the cooling fans and ventilation.

Do not expose the front glass to sunlight or other strong light source from any angle.



Lenses can focus the sun's rays inside the fixture, creating a potential fire hazard.

■ **Maximum ambient temperature**

The fixture is intended for indoor and outdoor application.

t_a45℃

Do not operate the fixture if the ambient temperature (Ta) exceeds 45℃

■ **Protection against electrical shock**

Connection must be made to a power supply system fitted with efficient earthing (Class I appliance according to standard EN 60598-1).



It is,moreover, recommended to protect the supply lines of the projectors from indirect contact and/or shorting to earth by using appropriately sized residual current devices.

■ **Connection to mains supply**

The double insulation between the LV power supply and the control conductor on the fixture.



Connection to the electricity mains must be carried out by a qualified electrical installer.

Check that the mains frequency and voltage correspond to those for which the projector is designed as given on the electrical data label.

This label also gives the input power to which you need to refer to evaluate the maximum number of fittings to connect to the electricity line, in order to avoid overloading.

Don't use the power cable when the insulation is damaged.



It must be the manufacturer or distributor or the professional person to change the damaged power cable in order to avoid any dangerous.

■ Temperature of the external surface

t_c 60℃

The maximum temperature that can be reached on the external surface of the fitting, in a thermally steady state is 60℃.

■ Maintenance



Before starting any maintenance work or cleaning the luminaire, the power supply to the luminaire must be disconnected.

After the power is cut off, in order to avoid burns, do not disassemble any part of the lamp within 15 minutes.



■ Light

The light source in this luminaire should be replaced by the manufacturer or its service agent or by a similarly qualified person;

Always cut of f the power before replacing the light source.



■ Protection against explosion

The protection screen, lens or ultraviolet screen on the lamp can be damaged to the degree of failure if visible damage, such as a crack or deep mark, should be replaced.



■ Protection optical radiation

Class 1 laser products (IEC 60825-1:2014) - RG3 (IEC 62471:2006)

Warn! Do not look directly at the light source at work, as it may damage the retina of the eye and cause visual blindness.



The exposure distance of lighting fixtures to the eyes and skinShould be greater than 65 meters.



Due to the risk of skin or corneal burns, do not operate or use the light in areas where people are exposed.

For safety reasons, operators should avoid direct irradiation of the light source of the lamp into areas with human access before starting to control the lamp.



■ APPROVALS



- The product implementation standard: IEC 60598-1、IEC 60598-2-17
- Approved certifications: CE、RoHs
- The product complies with the following EU directives:
  Low Voltage Directive 2014/35/EU . EMC Directive 2014/30/EU

TECHNICAL INFORMATION

●ELECTRICAL SPECIFICATIONS AND CONNECTIONS

- Power supplies available ： AC100-240V，50/60Hz
- Rated power ： 380W (100V:3.8A 220V:1.73A) PF0.976
- Power connector：IP66 Waterproof Neutrik I/O Power Jack (SAC3PX 16A 250V)
- DMX and RDM data in/out ： 3-pin (standard) or 5-pin waterproof (optional) (IP66) XLR

●LIGHT SOURCE

- Light source: White laser lighting module
- Light source power: 260W
- Laser source life expectancy: 12000 hours
  (*Laser source life depends on several factors, including but not limited to:environmental conditions, control dimming, power supply and voltage, switchingcycle, fixture mode, etc.)
- Luminous flux: 12000 lm
- Light source color temperature: 7000 K

●LAMPS:

- Luminous flux: 10090 lm
- Color temperature: 7490K
- CRI: >64
- Illumination: 439000 lux/20m

●OPTICAL SYSTEM

- Beam angle: 0.88° (optional 0.63° or 1.13°)
- Diameter of light exit lens: φ190 mm
- Illumination: 1750000 lux @10m 7680lux @150m

●DYNAMIC EFFECT

- Color wheel: 14 colors + white light, bidirectional rotating rainbow effect; independent CMY color mixing system, free color mixing
- Fixed gobo wheel: （φ106mm ）white light + 11 patterns + 3 kinds of animation (animation effect patterns), which can be shaken in both directions
- Prism: 8 prisms, 3rd order 24 prisms, various prism macro combination effects
- Soft Light Effect: Adjustable independent soft light effect
- Focus: Electric focus
- Strobe: 1-25 times/sec adjustable pulse strobe and random strobe
- Dimming: 0-100% linear adjustment.

●SCAN SYSTEM

- Horizontal scan: 540°
- Vertical scan: 240°
- Pan/vertical fine adjustment: 2.11°/0.94°
- Pan/Tilt for automatic error correction and correction

●CONTROL AND PROGRAMMING

- Address code setting: RDM two-way data transmission, the console can remotely reset the DMX address code
- Display: The display panel adopts a 2.0-inch LCD12864 LCD screen
- Intelligent management and control: The menu can record the use time and light
- emitting time of the device, and display the device temperature, channel data and software version information
- Error alarm: automatic alarm for lamp failure
- Software upgrade: USB upgrade software can be inserted through the USB interface
- Control method: DMX512, RDM
- Channel mode: 17CH, see channel table for details

●THERMAL SPECIFICATION

- Maximum ambient temperature: 45 °C
- Minimum ambient temperature: -20 °C (lamps need to be powered on for 20 minutes in advance)
- Maximum body surface temperature point: 60 °C
- Minimum operating temperature of light source: 0 °C

●APPROVALS

- The product implementation standard: GB 7000.1-2015 GB7000. 217-2008
- Approved certifications: CE、RoHs
- The product complies with the following EU directives:

  Low Voltage Directive 2014/35/EU . EMC Directive 2014/30/EU

●MECHANICAL SPECIFICATION

- Integrated foldable lamp hook design, easy to disassemble and transport
- The lamp adopts all-aluminum alloy shell, anti-oxidation treatment, high salt spray protection level
- IP Rating: IP66
- Lighting Size: 509mm×320mm×742mm N.W.: 36Kg
- Box Size(1 set): 810mm×580mm×395mm G.W.: 41Kg
- Flycase Size (1pcs): 640mm×620mm×825mm G.W.: 71Kg

1

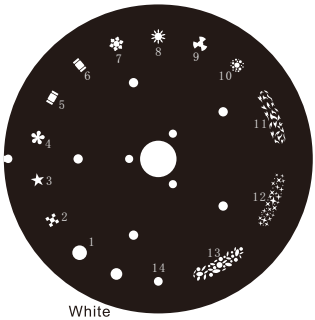

Static gobo wheel
(please refer to the actual material)

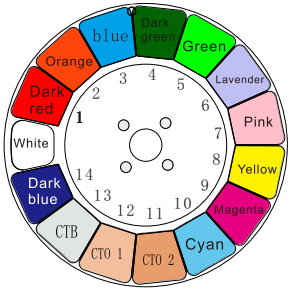

Color wheel
(please refer to the actual material)

2

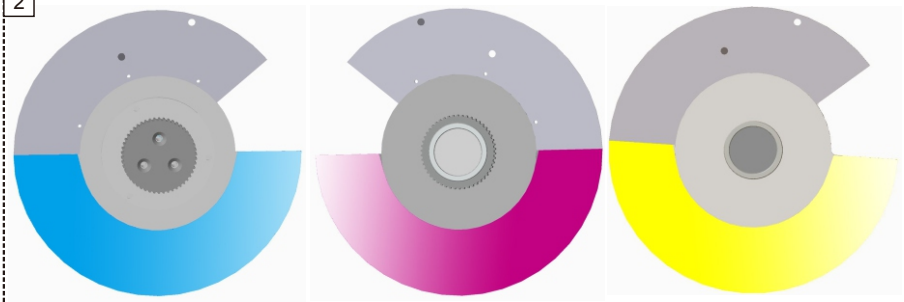

C M Y

CMY color mixing system

3

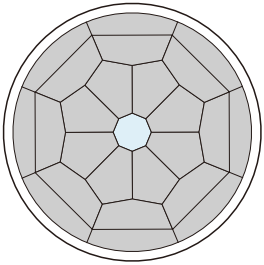

Prism wheel 1

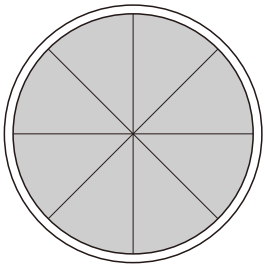

Prism wheel 2

4

distance, spot diameter and illumination diagram

Standard（0. 88° ）

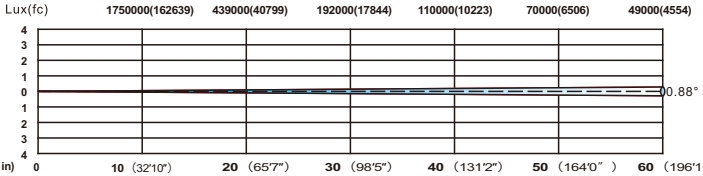

Distance m(ft in)	0	10 (32'10")	20 (65'7")	30 (98'5")	40 (131'2")	50 (164'0")	60 (196'10")
0.88° diameter m(ft in)		0.34 (1'1")	0.5 (1'8")	0.78 (2'7")	0.8 (2'7")	0.96 (3'2")	1.11 (3'8")
1.13° diameter m(ft in)		0.39 (1'3")	0.58 (1'11")	0.65 (2'2")	0.98 (3'3")	1.17 (3'10")	1.37 (4'6")
0.63° diameter m(ft in)		0.3 (0'12")	0.41 (1'4")	0.52 (1'8")	0.63 (2'1")	0.74 (2'5")	0.85 (2'9")

ATTACHMENT AND BODY SIZE

1

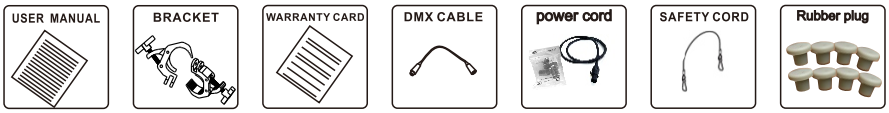

Attachment contents- Fig. 1

2

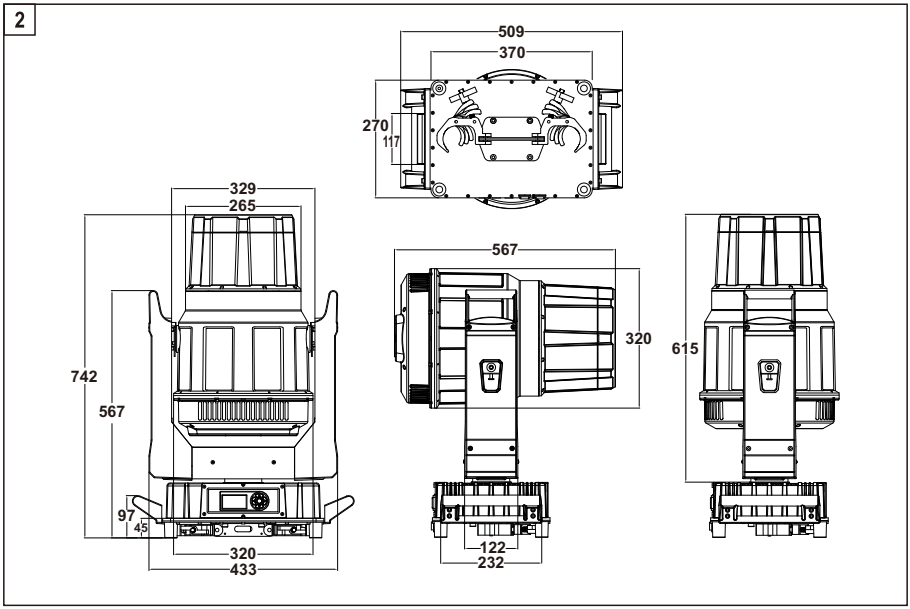

Body Size---Fig 2

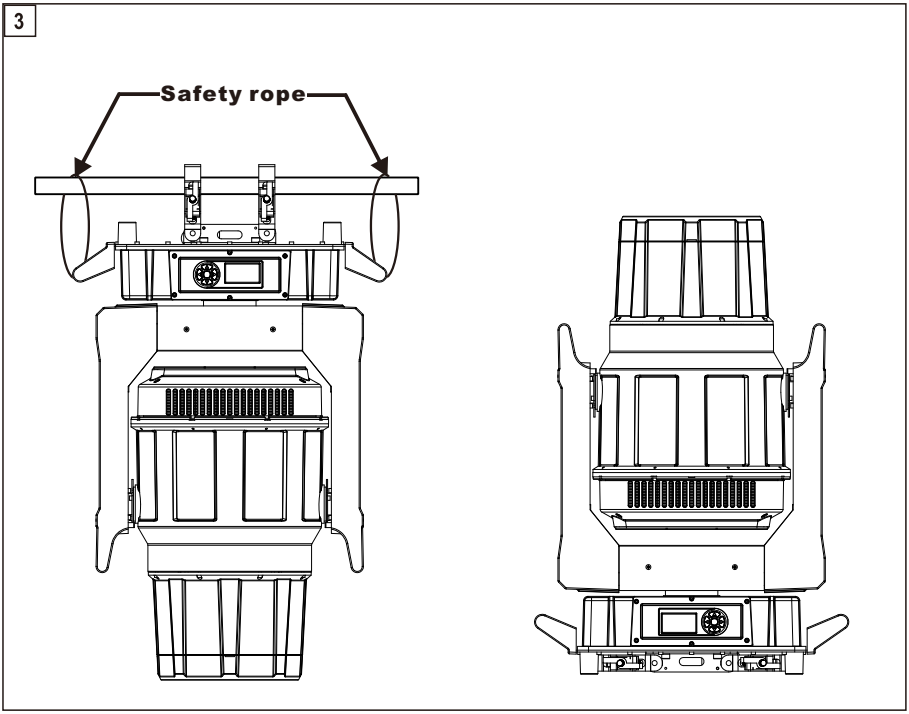

Installing the projector- Fig. 3

The projector can be installed on the floor resting on special rubber feet, on a truss or on the ceiling or wall.

WARNING:with the exception of when the projector is positioned on the floor, the safety rope must be fitted. This must be securely fixed to the support structure of the projector and then connected to the base handle.

Make sure all parts for fixing the projector are in a good state of repair.

Make sure the point of anchorage is stable before positioning the projector.

When suspending the fixture, ensure that the supporting structure and all hardware used can hold at least 10 times the weight of all the devices they support.

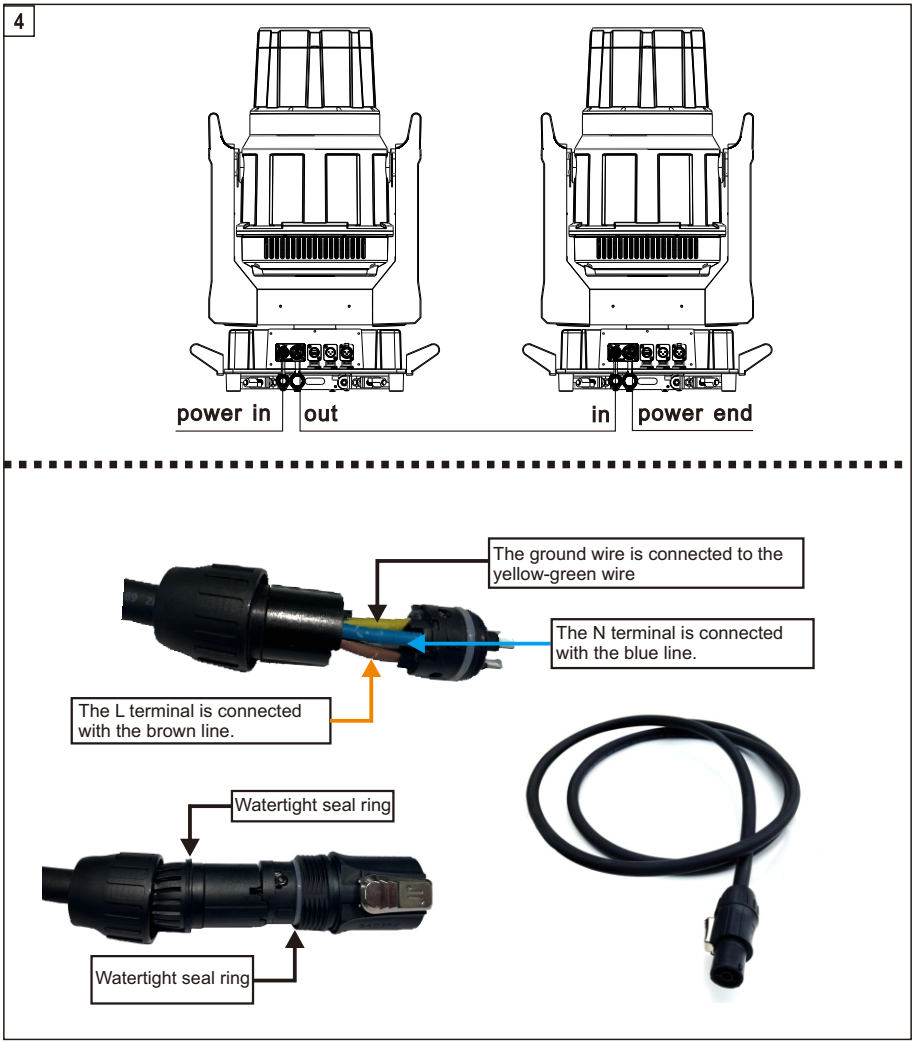

Connecting to the mains suppply ---Fig 4

- The stage lighting delivers a three-core waterproof plug.
- The stage lighting power supply can not be more than 4pcs pre line.
- Connection to the eiectricty mains must be carried out by a qualified electrical installer.
- After doing the above operation and making sure all the devices had been installed with natural operate, press the power switch to check whether everything is working normally.

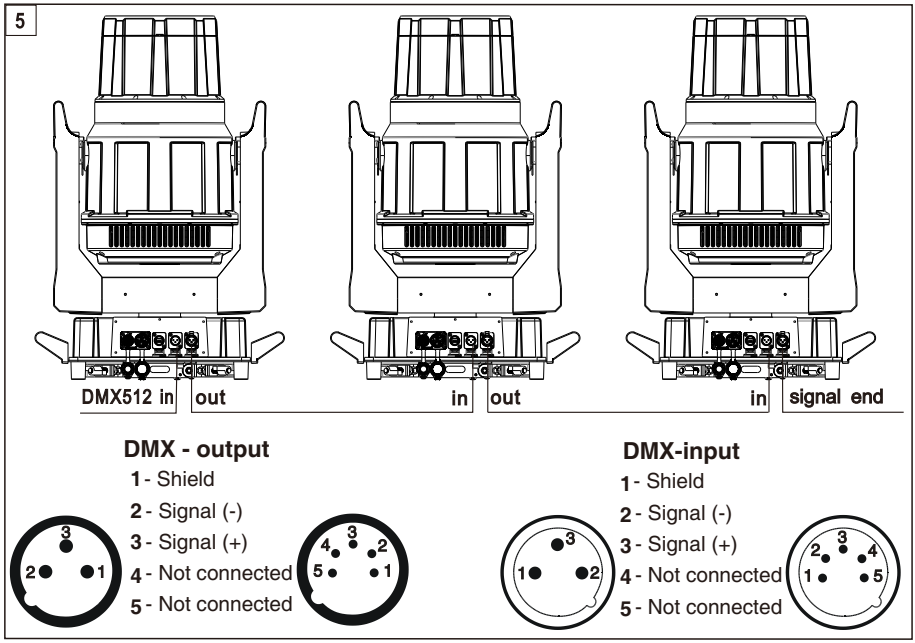

Connecting to the control signal line (DMX) - Fig. 5

◎ Please use the round 3 or 5-pin XLR plugs &sockets offered by menu facture to connect the first projector's output to the second projector' input and connect the second projector's output to the third projector's input. And in the same way for the rest,eventually connect the last projector's output, all the projectors are together

◎ The projectors's control signal output or input by using the 3 or 5-pin XLR pug and socket.If need to lengthen the communication cable,please make sure the both side of 3 or 5-pin plug is one to one . (one to one,two to two,three to three).Otherwise,the communication cable will be interrupted.The communicate cable is 2-cord screened cable 75Ω resistance with each core is at least a 0.5mm diameter.(**Caution:**All the inside leading wire of 3 or 5-pin XLR plug couldn't touch each other or plinth).

◎ Recommend to use the DMX signal terminator for the installation to avoid the electronic noise dama -ge the digital control signal.Simply speaking,DMX terminator is an XLR connector with a 120Ω 1/2W resistor connected across pin 2 and 3.Which is then plugged into the output socket on the last projec -tor in the chain.Refer to the connection.

6

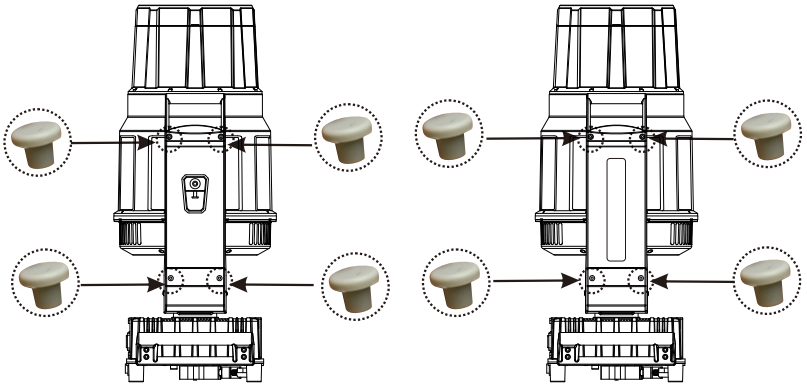

Please install the rubber plug before use.

CONTROL PANEL

7

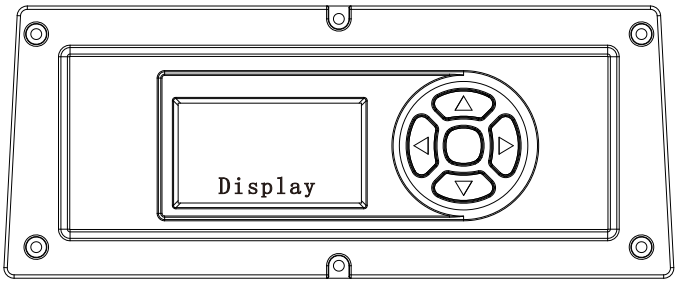

Up arrowhead : page up
Down arrowhead : page down
Left arrowhead : reduce
Right arrowhead : increase
Enter : OK function
Exit : in the choice screen

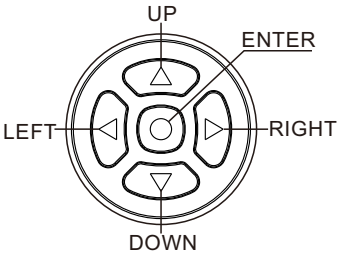

● Press the switch.The projector starts resetting the effects.
At the same time,the following information scrolls on the display
（Please refer to the actual material)

8



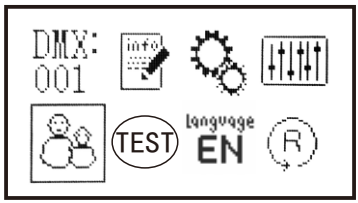

DMX: 001 DMX Address
Information
Personal
Manual control
Service
TEST Test
language EN Language
R Reversal

MENU SETTING (V1.0)

Main menu	I menu	II menu	III menu
DMX Address/DMX	Address:001-4xx		
	→ Passwork ON/OFF		
	return		
Information	Totel Time	→ Power:****(h)	
		Laser ON:****(h)	
	Laser hours	→ Total:****(h)	
		Laser open:****(h)	
	Temperature	Out TEM: 000.0	
		→ In TEM: 000.0	
		Laser TEM: 000.0	
	RDM UID	→ RDM UID 3888:00000000	
	FanSpeed/Voltage	1.Out Fan:00.0V	
		2.LaserFan:00.0V	
		3.OutFan1:0000 RPM	
		→ 4.OutFan2:0000 RPM	
		5.OutFan3:0000 RPM	
		6.LaserFan1:0000 RPM	
		7.LaserFan2:0000 RPM	
	DMX Live	1.Cyan (***)	
		2.Magenta (***)	
		3.Yellow (***)	
		4.Colour (***)	
		5.Shutter (***)	
		6.Dimmer (***)	
		7.Gobo (***)	
		8.Prism (***)	
		→ 9.PrismROTA. (***)	
		10.PrismMacro (***)	
		11.Frost (***)	
		12.Focus (***)	
		13.Pan (***)	
		14.Pan Fine (***)	
		15.Tilt (***)	
		16.Tilt Fine (***)	
		17.Function (***)	
	System version	XY Board :V*.**	
		Focus Board:V*.**	
		→ Laser Board:V*.**	
		Fan Board:V*.**	
		CMY Board:V*.**	
	LaserWheel Info	NoDetected	
		→ stoped	
		rotating	
	Return(ESC)		
Personal	P/T invert	Pan invert	→ OFF
		→	ON
		Tilt invert	→ OFF
			ON
	Display	Language	→ English
			Chinese
		BackLight	Open
		→	→ Auto close(15s)
		Reversal	→ Normal
		→	Rota.180

Main menu	I menu	II menu	III menu
		Backlight blink →	ON
			OFF
		Return(ESC)	
	Return(ESC)		
Manual control →	Channel control →	1.Cyan (***)	
		2.Magenta (***)	
		3.Yellow (***)	
		4.Colour (***)	
		5.Shutter (***)	
		6.Dimmer (***)	
		7.Gobo (***)	
		8.Prism (***)	
		9.PrismROTA. (***)	
		10.PrismMacro (***)	
		11.Frost (***)	
		12.Focus (***)	
		13.Pan (***)	
		14.Pan Fine (***)	
		15.Tilt (***)	
		16.Tilt Fine (***)	
		17.Function (***)	
		Return(ESC)	
	Reset →	system reset	
		Pan/Tilt reset	
		Head motor reset	
		Return(ESC)	
	Return(ESC)		
	Error list		
	Clean error →	Keep	
		Clean	
	Calibration →	Pan 000-255	
		Tilt 000-255	
		Focus 000-255	
		Colour 000-255	
		Stat.Gobo 000-255	
		Prism1 000-255	
		Prism2 000-255	
		PrismRota. 000-255	
		Frost 000-255	
		Cyan 000-255	
		Magenta 000-255	
		Yellow 000-255	
		Return(ESC)	
		Open 000-255	
		Open+Co1 000-255	
		Co1 000-255	
		Co1+Co2 000-255	
		Co2 000-255	
		Co2+Co3 000-255	
		Co3 000-255	
		Co3+Co4 000-255	
		Co4 000-255	
		Co4+Co5 000-255	
		Co5 000-255	
		Co5+Co6 000-255	

Main menu	I menu	II menu	III menu
Service →	Calibration2 →	Co6 000-255	
		Co6+Co7 000-255	
		Co7 000-255	
		Co7+Co8 000-255	
		Co8 000-255	
		Co8+Co9 000-255	
		Co9 000-255	
		Co9+Co10 000-255	
		Co10 000-255	
		Co10+Co11 000-255	
		Co11 000-255	
		Co11+Co12 000-255	
		Co12 000-255	
		Co12+Co13 000-255	
		Co13 000-255	
		Co13+Co14 000-255	
		Co14 000-255	
		Co14+Open 000-255	
	Factory →	Defualt	
		Time clean →	total time
			Power up time
			Lighting time
		Developer →	Y-axis test switch
			X-axis test switch
			Manual Fan Vol
			FanSpeedToLamp
			manual or dmx
			Upgrade font
			Logo selection
			Upgrade LOGO
			set time
			Model settings
			ESC
		Firmware update	
		Return(ESC)	
	return		
Test →	Test P/T →	STEP ***	
	Test effect →	STEP ***	
	Test all →	STEP ***	
	Return(ESC)		
Language →	English		
	Chinese		
Reversal →	Normal		
	Rota.180		

CHANNEL FUNCTION(V1.0)

Channel	DMX	Percentage	Function	Note
1	0-255		**Cyan**	
2	0-255		**Magenta**	
3	0-255		**Yellow**	
			Colour	
	0-4	5	White	
	5-8	4	White+Red	
	9-12	4	Red	
	13-17	5	Red+Orange	
	18-21	4	Orange	
	22-25	4	Orange+Aquamarine	
	26-29	4	Aquamarine	
	30-34	5	Aquamarine+Green	
	35-38	4	Green	
	39-42	4	Green+Light Green	
	43-46	4	Light Green	
	47-51	4	Light Green+Lavender	
	52-55	4	Lavender	
	56-59	4	Lavender+Pink	
	60-63	4	Pink	
4	64-68	5	Pink+Yellow	
	69-72	4	Yellow	
	73-76	4	Yellow+Magenta	
	77-81	4	Magenta	
	82-85	4	Magenta+Cyan	
	86-89	4	Cyan	
	90-93	4	Cyan+CTO 2	
	94-98	4	CTO 2	
	99-102	4	CTO2+CTO1	
	103-106	4	CTO1	
	107-110	4	CTO1+CTB	
	111-115	5	CTB	
	116-119	4	CTB+Blue	
	120-123	4	Blue	
	124-127	4	Blue+White	
	128-191		CCW, Fast→Slow Rotation	
	192-255		CW, Slow→Fast Rotation	
			Strobe	
	0-9	0-3.5	Open	
	10-49	3.9-19.2	Lighting to Dark from fast slow	
5	50-89	19.6-34.9	Opening pulses in sequences from fast slow	
	90-119	35.3-46.7	breathe Effect from fast slow	
	120-179	47.1-70.2	Random Slow-Fast Strobe	
	180-255	70.6-100	Slow-Fast Strobe	
6	0-255		**Dimmer**	
			Gobo	
	0-3		White	
	4-7		Gobo1	
	8-11		Gobo2	
	12-15		Gobo3	
	16-19		Gobo4	
	20-23		Gobo5	
	24-27		Gobo6	
	28-31		Gobo7	
	32-35		Gobo8	
	36-39		Gobo9	
	40-43		Gobo10	
7	44-47		Gobo11	
	48-51		Gobo12	
	52-55		Gobo13	
	56-59		Gobo14	
	60-69		Gobo1 Shake Slow-Fast Speed	

Channel	DMX	Percentage	Function	Note
	70-79		Gobo2 Shake Slow-Fast Speed	
	80-89		Gobo3 Shake Slow-Fast Speed	
	90-99		Gobo4 Shake Slow-Fast Speed	
	100-109		Gobo5 Shake Slow-Fast Speed	
	110-119		Gobo6 Shake Slow-Fast Speed	
	120-129		Gobo7 Shake Slow-Fast Speed	
	130-139		Gobo8 Shake Slow-Fast Speed	
	140-149		Gobo9 Shake Slow-Fast Speed	
	150-159		Gobo10 Shake Slow-Fast Speed	
	160-169		Gobo11 Shake Slow-Fast Speed	
	170-179		Gobo12 Shake Slow-Fast Speed	
	180-189		Gobo13 Shake Slow-Fast Speed	
	190-199		Gobo14 Shake Slow-Fast Speed	
	200-225		CCW, Fast→Slow Rotation	
	226-229		Rotation	
	230-255		CW, Slow→Fast Rotation	
			Prism	
	0-63		Unused Range	
8	64-127		Prism1	
	128-191		Prism2	
	192-255		Prism1+Prism2	
			Prism Rotation	
	0		Unused Range	
	1-63		Angle linear adjustment	
	Three kinds of prism effect options: set the prism (prism 1, prism 2 or prism 1+2) in the 8th channel			
9	64-127		CCW, Fast → Slow	
	128-191		CW, Slow → Fast	
	192-207		slow → fast, rotate 90° back and forth	
	208-223		slow → fast, rotate 180° back and forth	
	224-239		slow → fast, rotate 270° back and forth	
	240-255		slow → fast, rotate 360° back and forth	
			Prism Macro	
	0-15		Unused Range	
	16-55		fast → slow, Prism 1 can switch freely	
	56-95		fast → slow, Prism 2 can switch freely	
10	96-135		fast → slow, Prism 1 + Prism 2 can be switched freely at the same time	
	136-175		fast → slow, prism 1 is selected + prism 2 is freely switched	
	176-215		fast → slow, Prism 2 is selected + Prism 1 is free to switch	
	216-255		fast → slow, prism 1 and prism 2 are interlocked and switched	
			Frost	
11	0-9		Atomized removal	
	10-255		Atomization move in	
12	0-255		**Focus**	
13	0-255		**Pan**	
14	0-255		**Pan Fine**	
15	0-255		**TILT**	
16	0-255		**TILT Fine**	
			Function	
	0-25	0-9.8	Unused Range	
	26-30	10.2-11.8	Effects Reset	
	31-35	12.2-13.7	PAN/TITL Reset	
17	36-40	14.4-15.7	Complete Reset	
	41-180	16.1-70.6	Unused Range	
	181-200	71.0-78.4	Unused Range	
	201-220	78.8-86.3	Unused Range	
	221-255	86.7-100	Unused Range	

CIRCUIT CONNECTING DIAGRAM

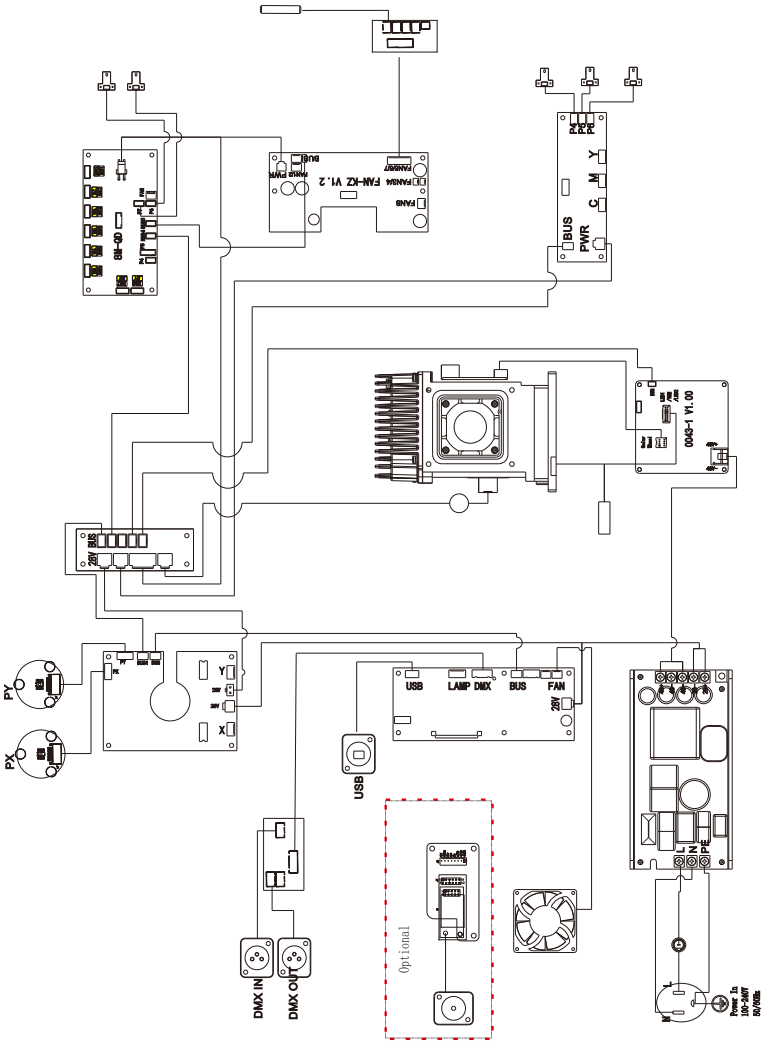

CLEANING AND MAINTENANCES

■ In order to ensure the fixture could work normally. It should be kept clean always . The lens should also be regularly cleaned to maintain an optimum light output. Do not use any type of solvent on lens. It will damage the fixture.

■ Suggestion: The continue usage of the light don't exceed 4 hours. Or it will shorter the usage of the lamp. Please use the alternative operation to solve this problem. The fixture power ON time is best not over 48 hours, or it would generate lamp protection procedure.

■ Please disconnect the power supply when begin to maintenance take down the fixture. Please let the parts cool down 10 minute at least then begin to install.

■ Please inspect the lens or other moving parts timing and keep them clear and static. If find anything damaged or looseness must change a lamp or fix the lamp in order to avoid the accident.

Please check the machenical parts is jamging.After cleaning,please add some temperature -durable juice.

■ The fixture use the strong cool system.It iseasy for the dirty to be colletced.Please do clear the hot-sak one time two week at least.

■ After you use the fixture,please check the intake place whether there are some wastepaper, please clean it up,or the windmill will break down and causing fire.

CAUTION!!!
Disconnect from mains before starting maintenance operation.

TROUBESHOOTING

It is recommended some solution for some normal trouble shooting. Any inextricability problems should always be handling by the professional person. Disconnect the power supply before maintenance the fixture.

■ LED off ：

◎ Please check if install the suitable voltage
◎ Please check whether the led will reach the end of their life can explode; please replace a same description led.
◎ Please check if the power supply is enough.
◎ Please check whether the DMX 512 controller pass the "turn on"

■The fixture couldn't accept the control order:

◎ Please check the start code address and the function option are correct.
◎ Please check whether the communicate control cable is on good connection or the cable is too long or interrupt.
◎ Please check the control system is not valid, check the signal amplifier of chain connected is valid.
◎ Please check whether the communicate cable is too long or the other equipment is mutually conjugate.
◎ Please arrange the wire well, shorter the signal cable, put the high voltage cable and low voltage cable separately.
◎ Add the signal amplify isolator.
◎ Signal cable is used the excellent screening doublet (Resistance 75 OHM）
◎ The end of the light end and the end resistance.

■The fixture can't move:

◎ Please check if the power supply is suitable for the light voltage data.
◎ Please check the light if they are deformation, inside parts is broken, become wet etc will lead the loose contact.
◎ Please check the if the iniside lead wire and the connector is loose.
◎ Please check the electric parts(such as the transformer,PCB board,contrller) is short-circuit or burn down.

■ The light beam dark, not inhomogeneou.

◎ when the light suore is to the usage life, the light suore is not enough, please change a new one for the same description.
◎ Please check the reflector parts is dirty.Keep them clear.
◎ Please measure if the power supply is enough.
◎ Enter the menu “service options” to choose “calibration” to enter the “Color” and “Gobo” adjustment, the center can be modulated.

■ The fixture shadow is fogging。

◎ Please check the data on the DMX 512 controller is suitable for the electric focus.
◎ Please check the machenical parts is jamging.After cleaning,please add some temperature -durable juice.

■ Part of the fixture couldn't responsled to the controlling order:

◎Please check the order is correct to the moving .

◎Please check the mechanicalpart is deformation or loose.

◎Please check the function to the motor soshet is loose or drive chip is burn down;

◎Please check the wire of the motor is cut at zig piont;

◎Please check these function to the motor is damaged.

■ On working,the pan & tilt couldn't work normally:

◎ Please check according to the above step by step;

◎ Please check the belt of the pan & tilt is broken;

◎ Please check the pan & tilt direction data to the receiver is damage;

◎ Restart the fixture and reset

DUTY EXONERATIVE AND COPYRIGHT PROTECTION

■ ny products broken that didn't according to the instruction is not guarantee to keep it in good repair.

■ The commentary for all the instruction belongs to the supplier in final

■ No authorize can't copy.

■ The information in this manual may be changed in the future,the company reserve the right to change the data without any advise.